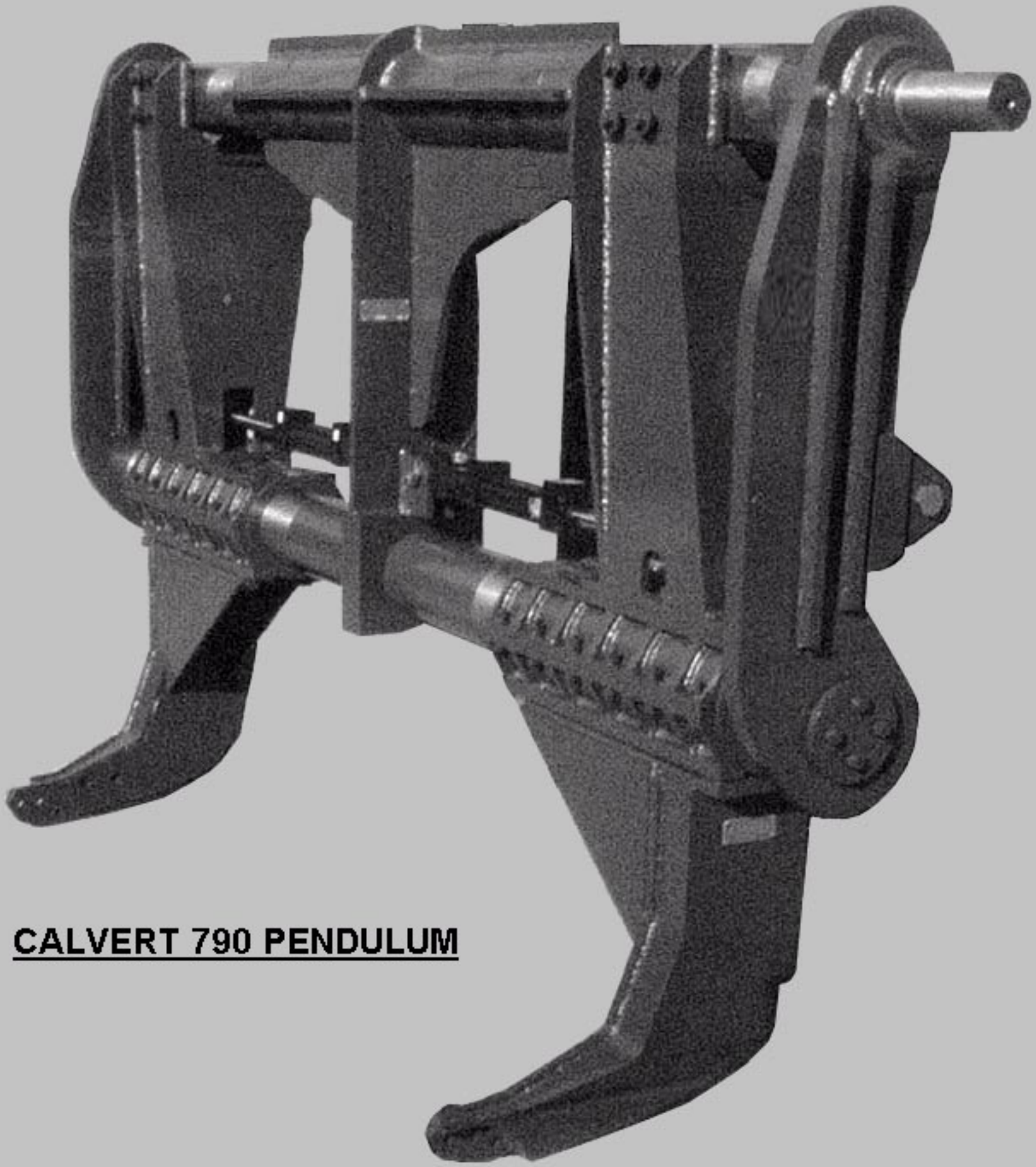

CALVERT 790 PENDULUM

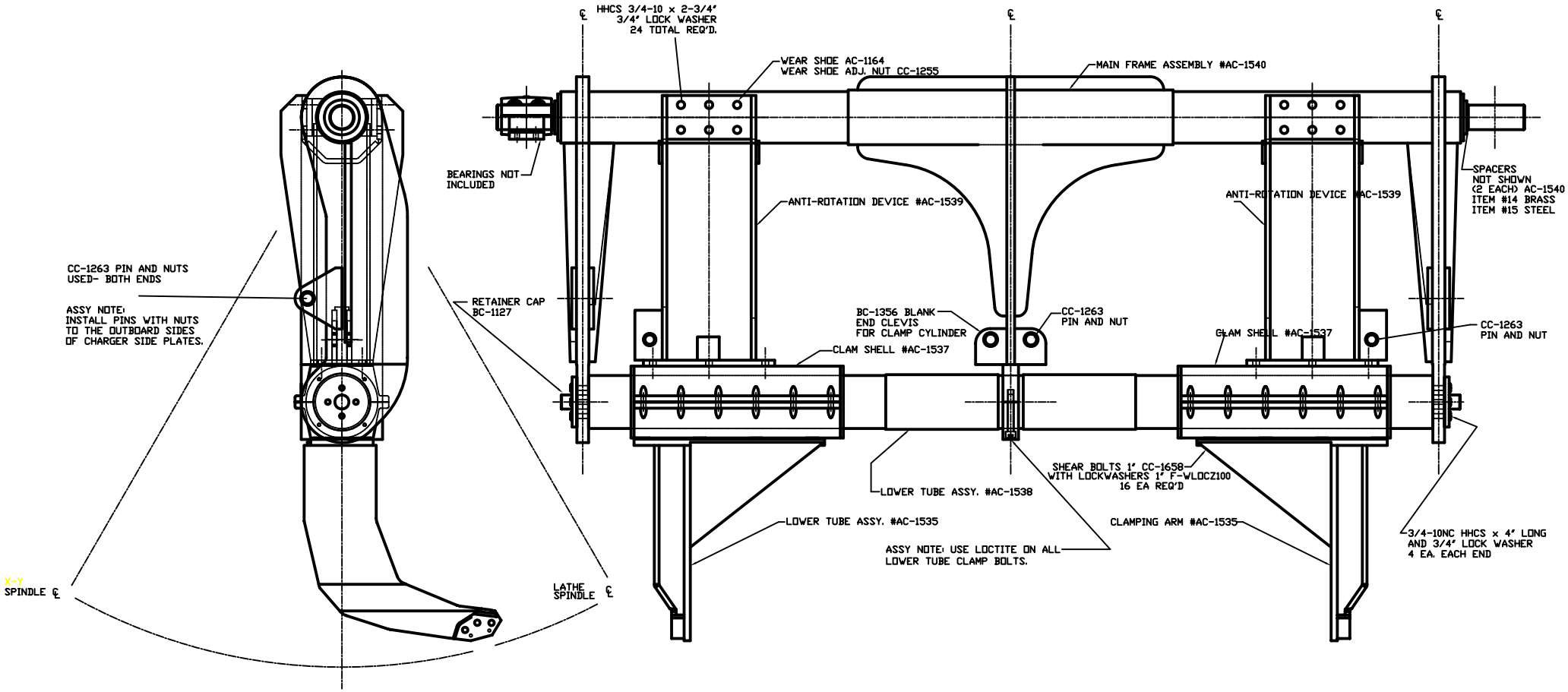
HHCS 3/4-10 x 2-3/4"
3/4" LOCK WASHER
24 TOTAL REQ'D.
WEAR SHOE AC-1164
WEAR SHOE ADJ. NUT CC-1255
MAIN FRAME ASSEMBLY #AC-1540
BEARINGS NOT INCLUDED
ANTI-ROTATION DEVICE #AC-1539
ANTI-ROTATION DEVICE #AC-1539
SPACERS
NOT SHOWN
(2 EACH) AC-1540
ITEM #14 BRASS
ITEM #15 STEEL
CC-1263 PIN AND NUTS
USED- BOTH ENDS
ASSY NOTE:
INSTALL PINS WITH NUTS
TO THE OUTBOARD SIDES
OF CHARGER SIDE PLATES.
RETAINER CAP
BC-1127
BC-1356 BLANK
END CLEVIS
FOR CLAMP CYLINDER
CC-1263
PIN AND NUT
CLAM SHELL #AC-1537
CLAM SHELL #AC-1537
CC-1263
PIN AND NUT
SHEAR BOLTS 1" CC-1658
WITH LOCKWASHERS 1" F-WLOCZ100
16 EA REQ'D
LOWER TUBE ASSY. #AC-1538
LOWER TUBE ASSY. #AC-1535
CLAMPING ARM #AC-1535
ASSY NOTE: USE LOCTITE ON ALL
LOWER TUBE CLAMP BOLTS.
3/4-10NC HHCS x 4" LONG
AND 3/4" LOCK WASHER
4 EA. EACH END
X-Y
SPINDLE ℄
LATHE
SPINDLE ℄